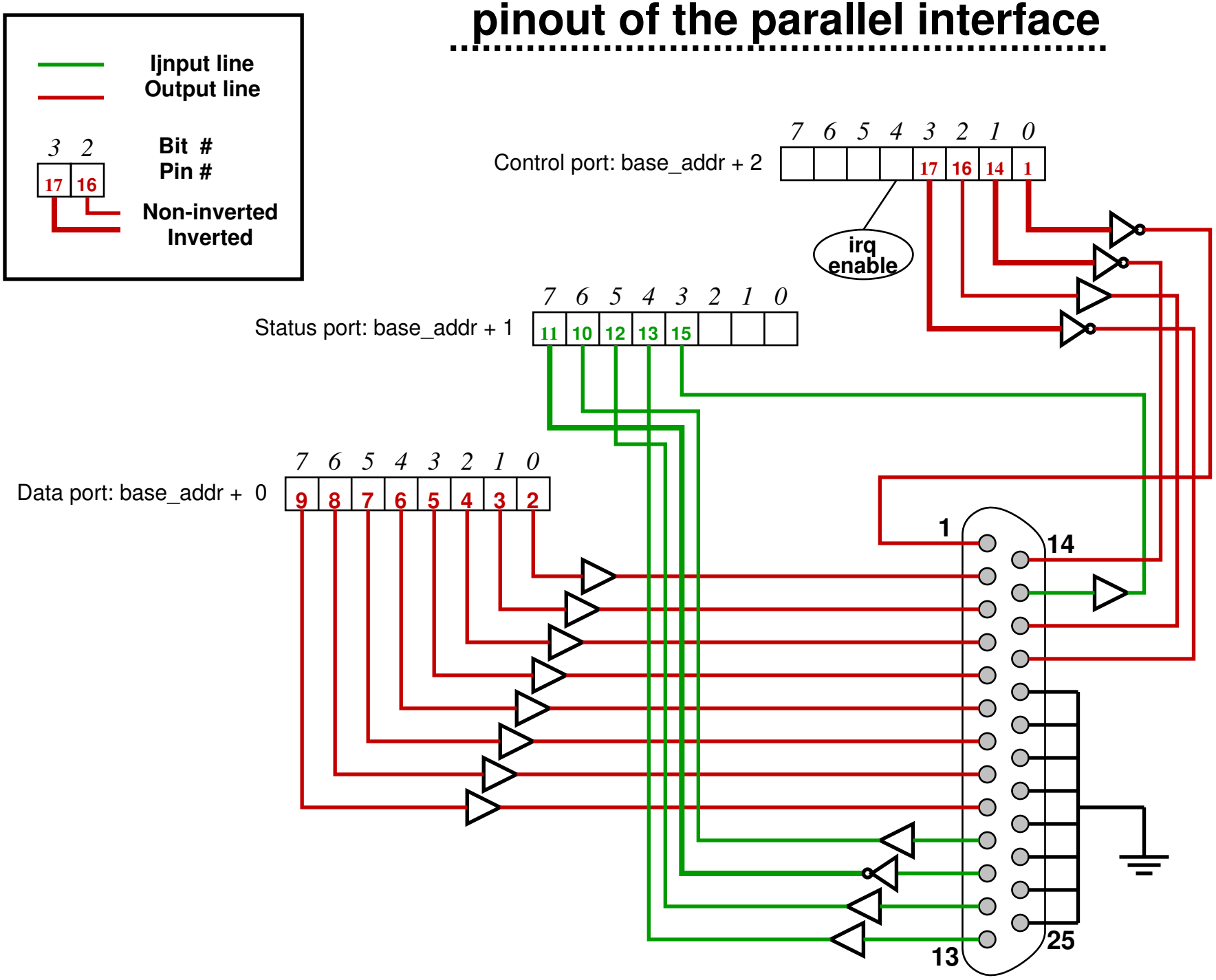pinout of the parallel interface